LUXAM
LIGHTING FOR MUSEUMS



L-MTSP-11-ND
1W SPOTLIGHT

PRODUCT CUTSHEET

SCAN
FOR WEBSITE

PRODUCT CUTSHEET
L-MTSP-11-ND | 1W SPOTLIGHT

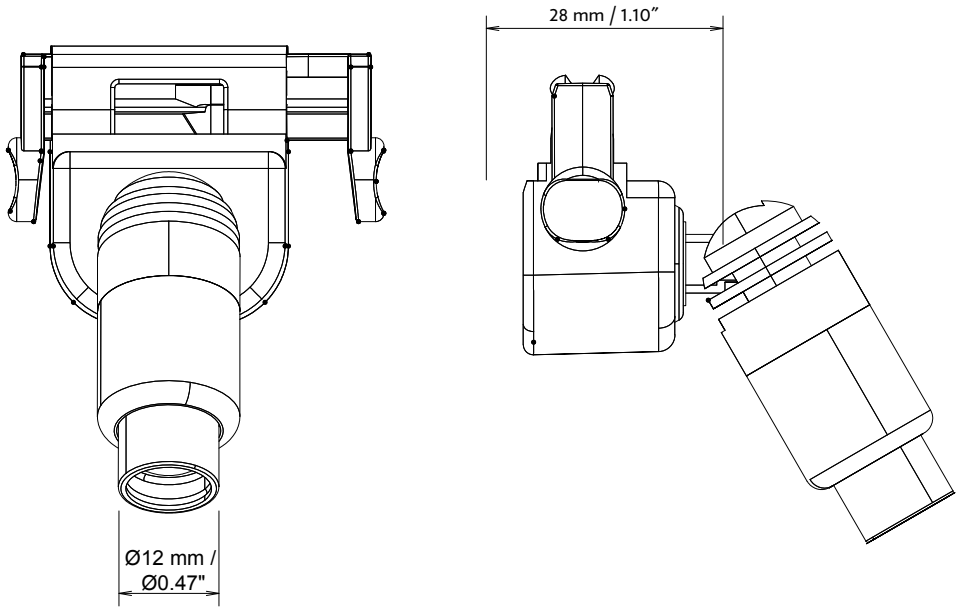

FEATURES

- Focusable from 9° to 70°
- Compatible with all MicroTrack systems
- Available accessories include Barndoors, Snoots & Filter Frames

No tools are needed for mounting and focusing the fixtures.*

*to lock the rotation axes and focus point 1.5mm and 0.9mm HEX drivers are required.

AVAILABLE ACCESSORIES

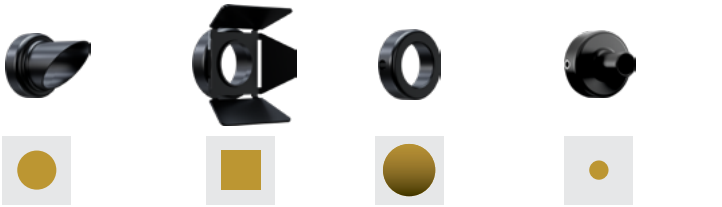

L-MTAS-10
ANGLED SNOOT

L-MTBD-10
BARNDOOR

L-MTFH-10
FILTER HOLDER

L-MTBR-10
BEAM REDUCER

TECHNICAL DATA

Voltage	12 VDC	**Main Material**	Aluminum
LED Wattage	1W	**Color Finishing**	Black, White and Silver
Wattage Once Used	1.2W	**Storage Temperature**	Recommended 22°C
Input Current	110mA	**Certificates / Standard**	UL, CE
Beam Angles	Zoomable 9° to 70°	**Warranty**	5 years
Pan / Tilt	355° / 90°	**Drivers Compatible**	Constant Voltage
Luminous Efficiency of the LED	100lm/W @RA95 min	**Lifespan**	50 000 hours
Color Temperatures	3000K, 4000K, 5000K	**Lens**	Glass
Adapter	Luxam Micro Track	**LED**	SMD CERAMIC
Dimmable Options	External dimming with PWM 12V track driver	**Class**	III, Indoor use only
CRI	95 min	**Rating**	IP30
Weight	34g	**Dimensions**	58 × 45 × 60 (mm) / 2.3 × 1.8 × 2.4"

PHOTOMETRICS

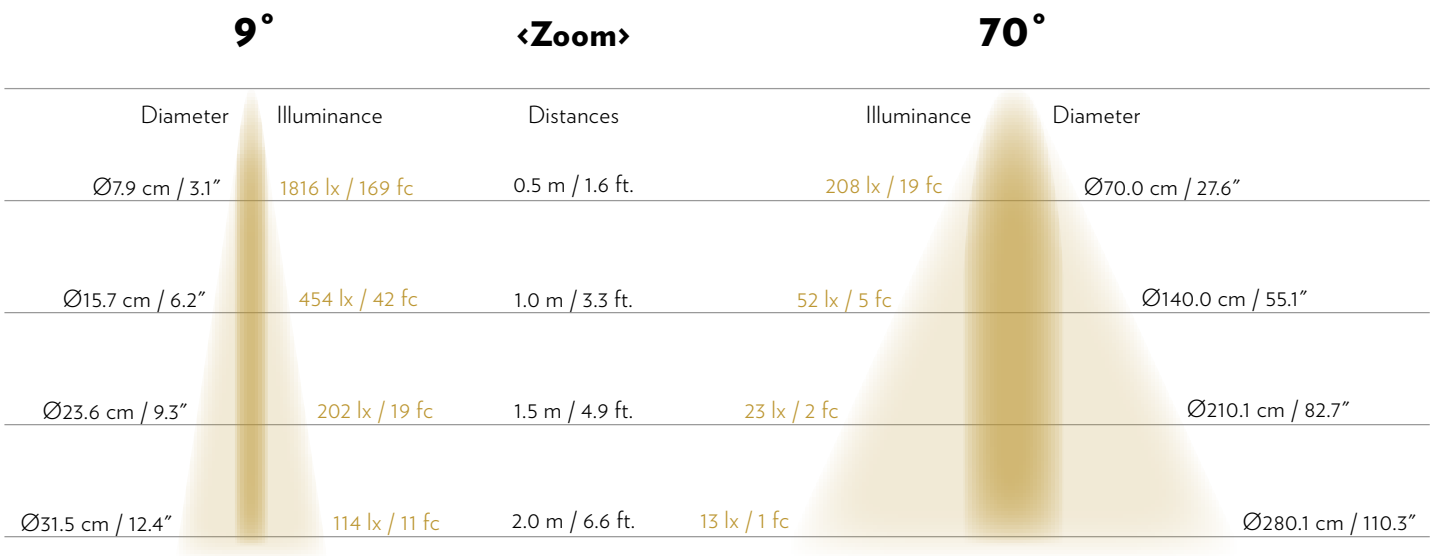

DRIVERS COMPATIBLE

Driver	Short Description	Nbr of Fixtures	Setting
PWM-60-12	Constant Voltage driver 60W, 0-10V	1-40	12V
PWM-60-12DA	Constant Voltage driver, 60W, DALI	1-40	12V
PWM-60-12DA2	Constant Voltage driver, 60W DALI-2	1-40	12V
LM-60-12-U1A2	Constant Voltage driver, 60W 0-10V, Push	1-40	12V
LM-60-12-U1M2	Constant Voltage driver with DMX control, 60W	1-40	12V

Please contact Luxam for project specific support if none of the above matches your requirements.

VARIATIONS



L-MTSA-12
1W Standalone
Onboard Dimmer



L-MSPS-10
1W Standalone
Remote Dimmer



L-UPL-10-1/2/3/4
Stem Lights

Please check product cut sheets for details - driver indications vary per product.