LUXAM
LIGHTING FOR MUSEUMS



SCAN
TO VIEW VIDEO

SCAN
FOR WEBSITE

L-MTSP - 02
3W SPOTLIGHT

PRODUCT CUTSHEET

PRODUCT CUTSHEET
L-MTSP - 02 | 3W SPOTLIGHT

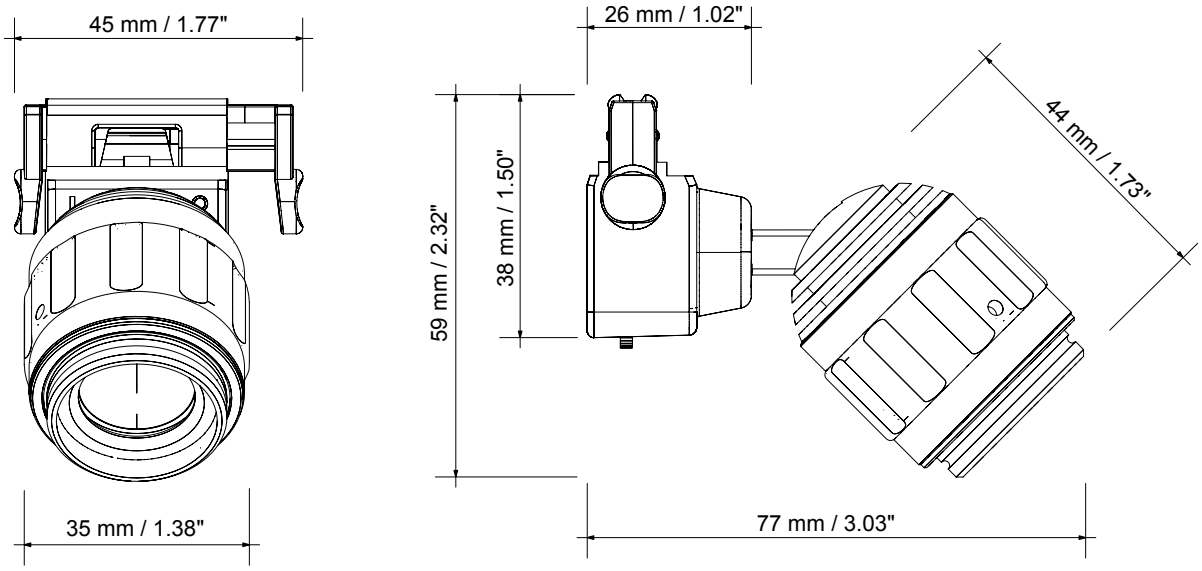

CE UL

FEATURES

- Focusable from 8° to 56°
- Track dimming control (no onboard dimmer)
- Compatible with all MicroTrack systems
- Available accessories include Barndoors, Snoots & Filter Frames

No tools are needed for mounting and focusing the fixtures.*

*to lock the rotation axes and focus point 1.5mm and 0.9mm HEX drivers are required.

3W ACCESSORIES



L-MTFH-01
FILTER HOLDER

L-MTAR-01
ARCHITECTURAL LENSE

L-MTSN-01
SNOOT

L-MTSC-01
CONE SNOOT

L-MTAS-01
ANGLED SNOOT

L-MTBD-01
BARNDOOR

L-MTBS-01
BOOSTER

LUXAM USA
12201 NW 35 Ste #534
Coral Springs, FL 33065
954 755 7254 | info@luxam.com

LUXAM FRANCE
80 rue du Dessous des Berges
75013 Paris
+33 982 272 946 | france@luxam.com

LUXAM GERMANY
Metzgerfeldweg 21
85737 Ismaning
+498951999651 | germany@luxam.com

LUXAM UK
184 Park Avenue
London NW10 7XL
info@luxam.com

TECHNICAL DATA

Voltage	12 VDC	**Main Material**	Aluminum
Led Wattage	3W	**Color Finishing**	Black, White and Silver
Wattage Once Used	3.8W	**Storage Temperature**	Recommended 22°C
Input Current	340mA	**Certificates / Standard**	UL, CE
Beam Angles	Zoomable 8° to 56°	**Warranty**	5 years
Pan / Tilt	355° / 90°	**Drivers Compatible**	Constant Voltage
Luminous Efficiency of the LED	100lm/W @RA95 min	**Lifespan**	50 000 hours
Color Temperatures	3000K, 4000K, 5000K	**Lens**	Glass
Adapter	Luxam Micro Track	**LED**	SMD CERAMIC
Dimmable Options	Onboard dimmer: PWM, range 0-100%	**Class**	III, Indoor use only
CRI	95 min	**Rating**	IP30
Weight	96g	**Dimensions**	90 × 45 × 69 (mm) / 3.5 × 1.8 × 2.7"

PHOTOMETRICS

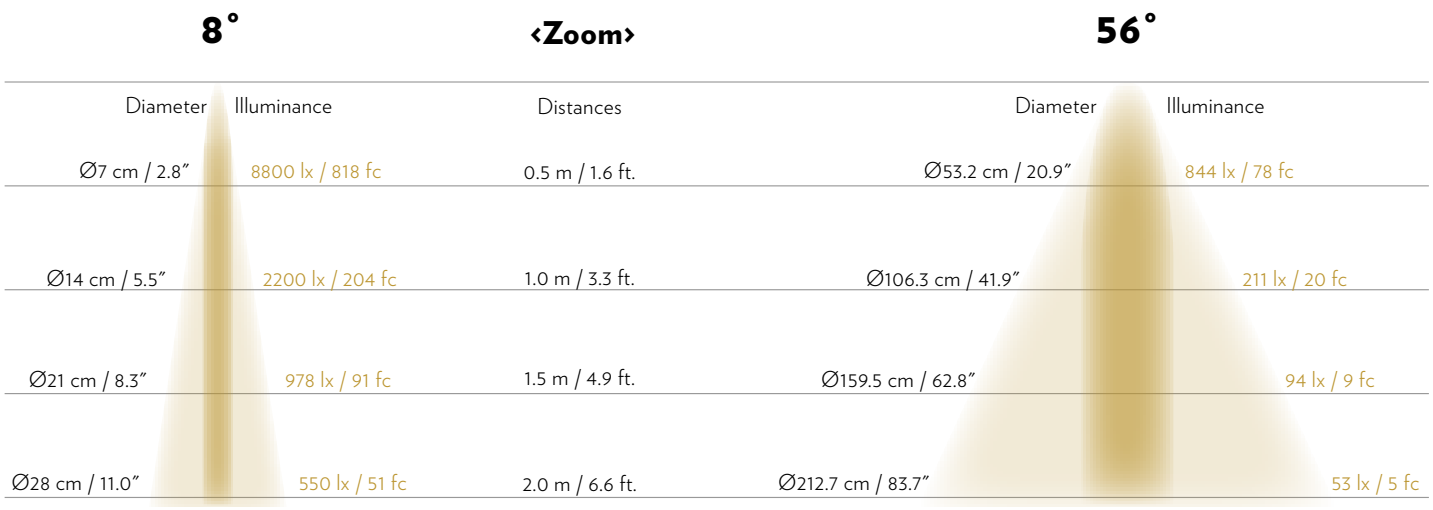

ALL VALUES IN LUX ARE GIVEN FOR A CURRENT OF 1000MA (3W)

DRIVERS COMPATIBLE

Driver	Short Description	Nbr of Fixtures	Setting
LPV-100-12	Constant Voltage driver, 100W	1 - 21	12V
LPV-60-12	Constant Voltage driver, 60W	1 - 12	12V
LPV-35-12	Constant Voltage driver, 35W	1 - 7	12V
NPF-90-12	Constant Voltage driver, 90W	1 - 18	12V
NPF-40-12	Constant Voltage driver, 40W	1 - 8	12V

SCREW SIZES Focus and Articulation: 1.5mm

*The number of fixtures per driver is calculated based on 80% capacity for safety reasons.

VARIATIONS



L-MTSP-01-ND
3W Spotlight
Remote Dimmer



L-MSPS-00
3W Standalone
Remote Dimmer



L-MTSA-02
3W Standalone
Onboard Dimmer

Please check product cut sheets for details - driver indications vary per product.