LUXAM
LIGHTING FOR MUSEUMS



L-MTSA-22
6W STANDALONE HEAD

PRODUCT CUTSHEET

SCAN
FOR WEBSITE

PRODUCT CUTSHEET
L-MTSA-22 | 6W STANDALONE HEAD

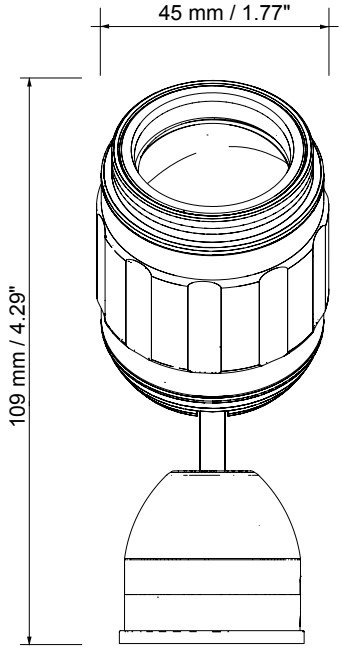

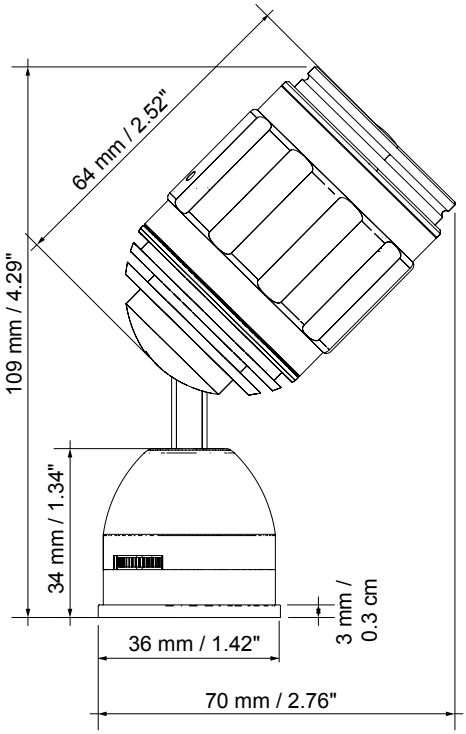

FEATURES

- Focusable from 8° to 55°
- Complete dimming control with onboard dimmer
- Easy interchangeability between 3 head options using the same base unit
- Standalone version with magnetic and screw base options
- Full range of accessories include Barndoors, Snoots & Filter Frames

No tools are needed for mounting and focusing the fixtures*

*to lock the rotation axes and focus point 1.5mm and 0.9mm HEX drivers are required.

AVAILABLE ACCESSORIES



L-MTAS-20
ANGLED SNOOT



L-MTBD-20
BARNDOOR



L-MTFH-20
FILTER HOLDER



L-MTAR-20
ARCHITECTURAL LENSE

TECHNICAL DATA

Voltage	11-24 VDC	**Color Finishing**	Black, White and Silver
Led Wattage	6W	**Storage Temperature**	Recommended 22°C
Wattage Once Used	7.8W	**Certificates / Standard**	UL, CE
Input Current	700-330mA	**Warranty**	5 years
Beam Angles	Zoomable 8° to 55°	**Drivers Compatible**	Constant Voltage
Pan / Tilt	355° / 90°	**Lifespan**	50 000 hours
Luminous Efficiency of the LED	100lm/W @RA97 min	**Lens**	Glass
Color Temperatures	3000K, 4000K, 5000K	**LED**	SMD CERAMIC
Adapter	Surface mount	**Class**	III, Indoor use only
Dimmable Options	Onboard dimmer: PWM, range 0-100%	**Rating**	IP30
CRI	97 min	**Dimensions**	76 × 45 × 115 (mm) / 3.0 × 1.8 × 4.5"
Weight	218g	**Length of Tail**	145cm
Main Material	Aluminum		

PHOTOMETRICS

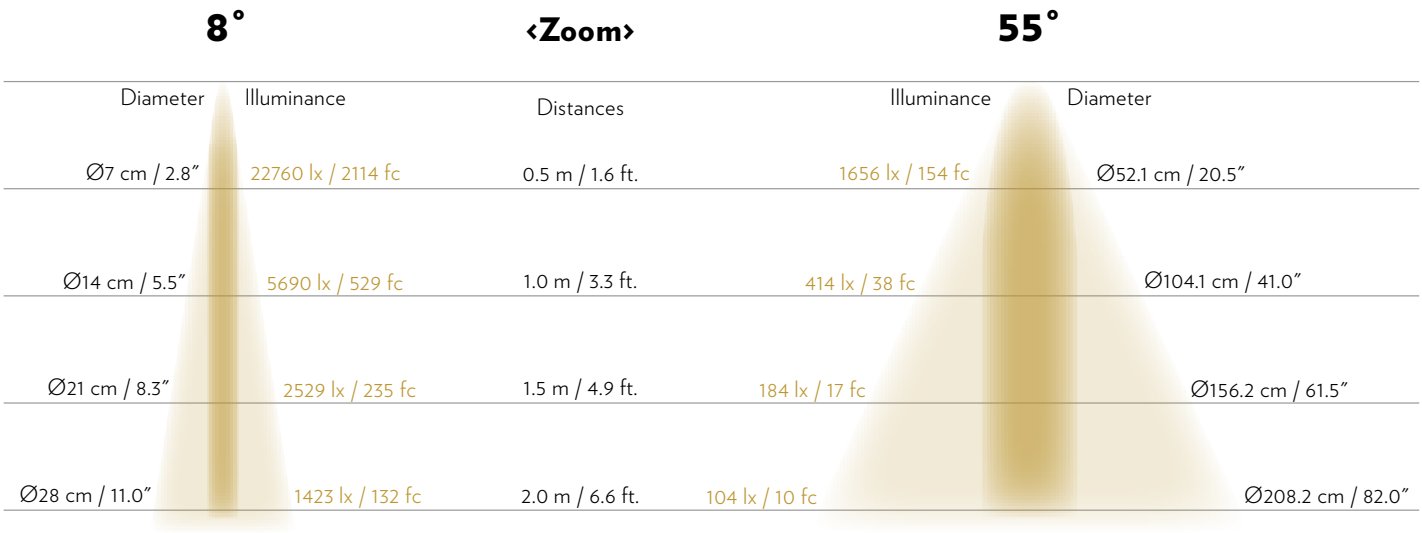

6W Spotlights transforms seamlessly between Zoom Spotlights, Quadri-Framing Shutter Spotlights, and Quadri Zoom Framing-Shutter Spotlights. With a single body design, you can easily switch between standard spotlight functionality and framing shutter spotlight capabilities.

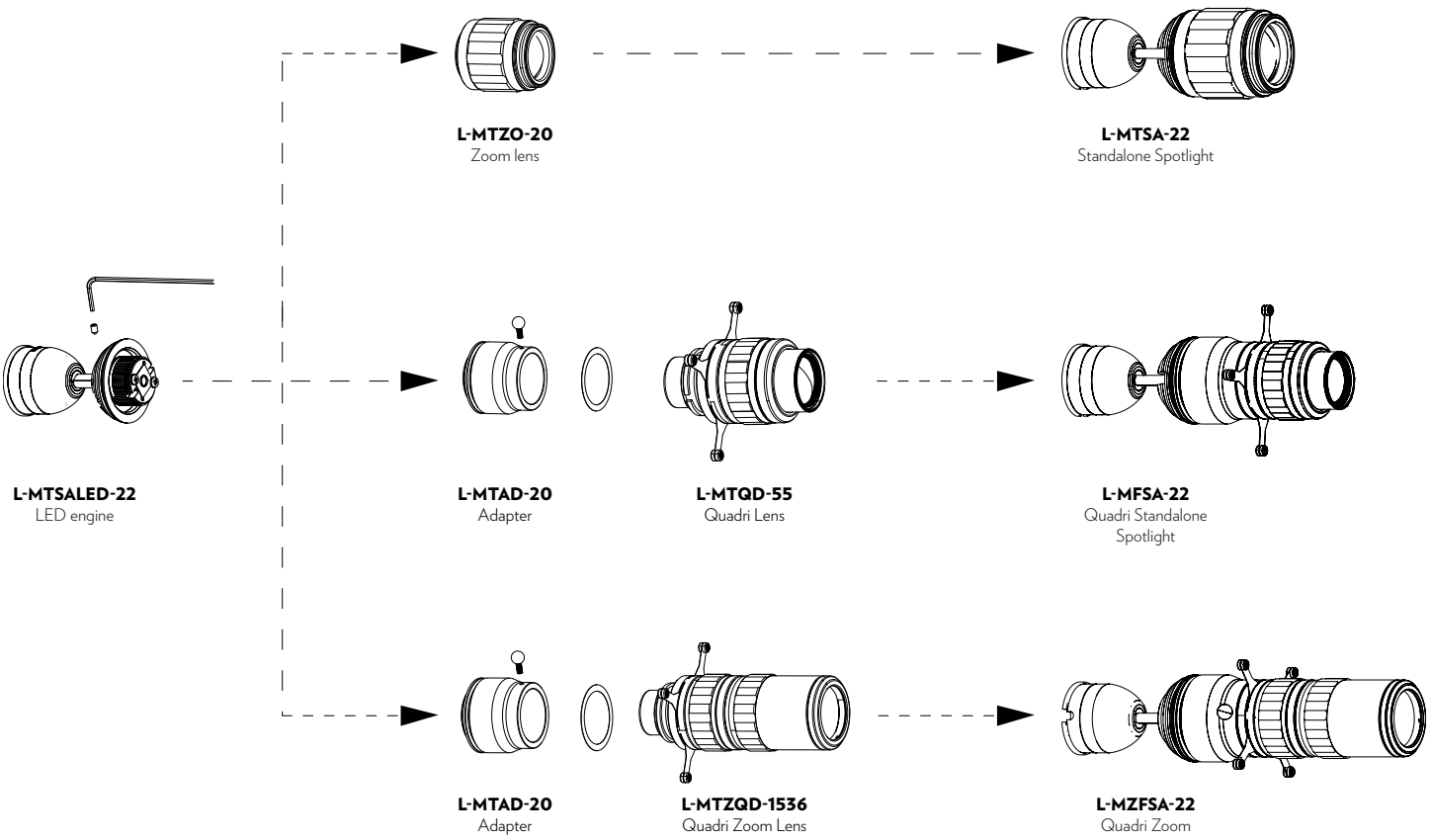

DRIVERS

Driver	Short Description	Nbr of Fixtures	Setting
LPV-100-12	Constant Voltage driver, 100W	1 - 10	12V
LPV-60-12	Constant Voltage driver, 60W	1 - 6	12V
LPV-35-12	Constant Voltage driver, 35W	1 - 3	12V
NPF-90-12	Constant Voltage driver, 90W	1 - 9	12V
NPF-40-12	Constant Voltage driver, 40W	1 - 4	12V

VARIATIONS



L-MSPS-20
6W Standalone
Solid Surface



L-MTSP-22 6W
6W Onboard Dimmer



L-MSFS-20
6W Quadri-Standalone
Solid Surface



L-MFSA-22
6W Quadri-
Standalone



L-MTFS-22
6W Quadri
Framing Shutter



L-MSZFS-20
6W Quadri-Zoom
Standalone
Solid Surface



L-MZFSA-22
6W Quadri-Zoom
Standalone Dimmer



L-MTZFS-22
6W Quadri-Zoom
Framing Shutter

Please check product cut sheets for details - driver indications vary per product.