LUXAM
LIGHTING FOR MUSEUMS



L-MSPS-10 1W
PRODUCT CUTSHEET

SCAN
FOR WEBSITE

PRODUCT CUTSHEET
L-MSPS-10 | 1W STANDALONE HEAD

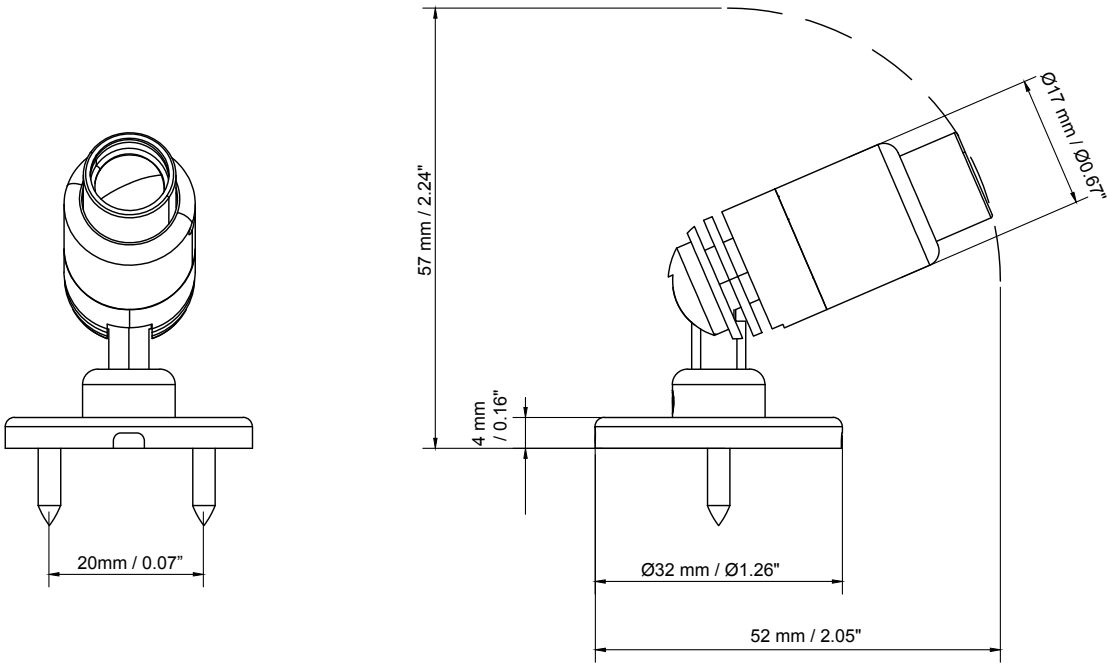

CE UL

FEATURES

- Fully focusable 9° to 70°
- Accepts all 1W accessories (barndoor, snoots, angled, snoots)
- Can add a dimmer to the driver
- Magnet base option available

These fixtures need to be wired together in series

1W ACCESSORIES



L-MTAS-10
ANGLED SNOOT



L-MTBD-10
BARNDOOR



L-MTFH-10
FILTER HOLDER



L-MTBR-10
BEAM REDUCER

LUXAM USA
12201 NW 35 Ste #534
Coral Springs, FL 33065
954 755 7254 | info@luxam.com

LUXAM FRANCE
80 rue du Dessous des Berges
75013 Paris
+33 982 272 946 | france@luxam.com

LUXAM GERMANY
Metzgerfeldweg 21
85737 Ismaning
+498951999651 | germany@luxam.com

LUXAM UK
184 Park Avenue
London NW10 7XL
info@luxam.com

PRODUCT CUTSHEET
L-MSPS-10 | 1W STANDALONE HEAD

TECHNICAL DATA

LED Wattage	1W	**Color Finishing**	Black, White and Silver
Wattage Once Used	1W	**Storage Temperature**	Recommended 22°C
Input Current	300-350mA Constant Current (connect in series)	**Certificates / Standard**	UL, CE
Beam Angles	Zoomable 9 to 70°	**Warranty**	5 years
Pan / Tilt	355° / 90°	**Drivers Compatible**	Constant Current
Luminous Efficiency of the LED	100lm/W @RA95 min	**Lifespan**	50 000 hours
Color Temperatures	3000K, 4000K, 5000K	**Lens**	Glass
Adapter	Surface mount	**LED**	SMD CERAMIC
Dimmable Options	Dimmable with PWM driver	**Class**	III, Indoor use only
CRI	95 min	**Rating**	IP30
Weight	43g	**Dimensions**	52 × 32 × 57 (mm) / 2.0 × 1.3 × 2.2"
Main Material	Aluminum	**Length of Tail**	145cm

PHOTOMETRICS

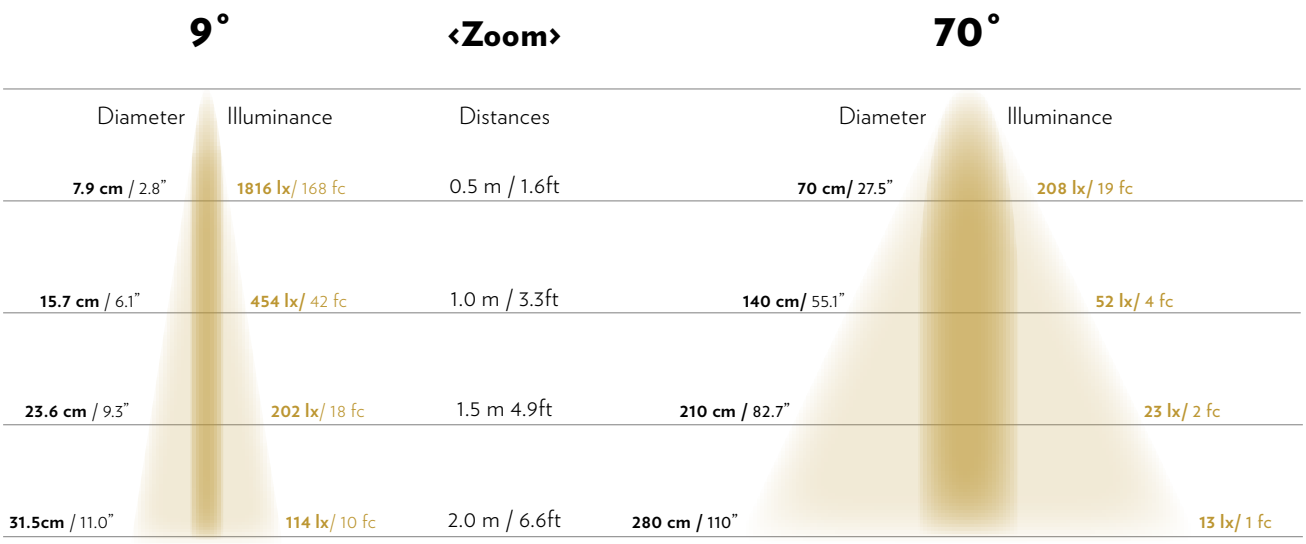

LUXAM USA
12201 NW 35 Ste #534
Coral Springs, FL 33065
954 755 7254 | info@luxam.com

LUXAM FRANCE
80 rue du Dessous des Berges
75013 Paris
+33 982 272 946 | france@luxam.com

LUXAM GERMANY
Metzgerfeldweg 21
85737 Ismaning
+498951999651 | germany@luxam.com

LUXAM UK
184 Park Avenue
London NW10 7XL
info@luxam.com

DRIVERS COMPATIBLE

Driver	Short Description	Nbr of Fixtures	Setting
SE-10-350-700-W1A	Constant Current driver with 0-10V control, 10W, 1 channel	1 - 4	350mA (2-12V)
SE-12-350-700-W1A	Constant Current driver with 0-10V control, 12W, 1 channel	4 - 8	350mA (10-24V)
SE-20-100-700-W1A	Constant Current driver with 0-10V control, 20W, 1 channel	3 - 14	350mA (9-42V)
SE-30-200-800-W1A	Constant Current driver with 0-10V control, 30W, 1 channel	3 - 14	350mA (9-42V)
AD-36-200-1200-U1P1	Constant Current driver with DMX control, 36W, 1 channel	4 - 18	350mA (10-54V)
SE-40-300-1050-W1A	Constant Current driver with 0-10V control, 40W, 1 channel	3 - 14	350mA (9-42V)
DMX-25-150-900-U1P1	Constant Current driver with DMX control, 25W, 1 channel	4 - 18	350mA (10-54V)
L-CT-DMX-RDM-1-3W-6CH	Constant Current driver with DMX control, 25W, 1 channel	1 - 6	350mA (3-21V)
SOLOdrive 12W/S SL12S-M1Z1A1 (eldoled 12W 0-10V)	Constant Current driver with 0-10V control, 12W, 1 channel	1 - 9	350mA (2-42V)

VARIATIONS



L-MTSP-11
1W Remote Dimmer



L-MTSA-12
1W Standalone Onboard Dimmer



L-UPL-10-1/2/3/4
Stem Lights

Please check product cut sheets for details - driver indications vary per product.

LUXAM USA
12201 NW 35 Ste #534
Coral Springs, FL 33065
954 755 7254 | info@luxam.com

LUXAM FRANCE
80 rue du Dessous des Berges
75013 Paris
+33 982 272 946 | france@luxam.com

LUXAM GERMANY
Metzgerfeldweg 21
85737 Ismaning
+498951999651 | germany@luxam.com

LUXAM UK
184 Park Avenue
London NW10 7XL
info@luxam.com