LUXAM
LIGHTING FOR MUSEUMS



L-MSPS-00
3W STANDALONE HEAD

PRODUCT CUTSHEET

SCAN
FOR WEBSITE

PRODUCT CUTSHEET
L-MSPS-00 | 3W STANDALONE HEAD

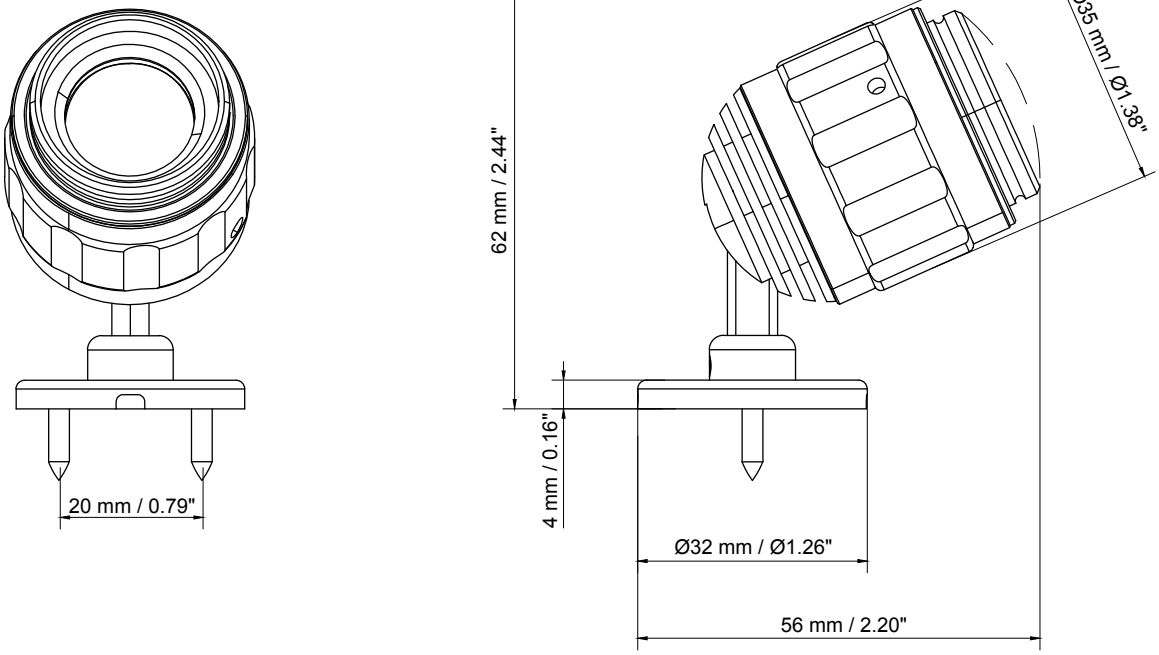

FEATURES

- Fully focusable 8° to 56°
- Can add dimmer to the driver
- Accepts all 3W accessories
- Magnet base option available
- These fixtures need to be wired together in series. Please refer to the dedicated manual for more details.

No tools are needed for focusing the fixtures*

*to lock the rotation axes and focus point 1.5mm and 0.9mm HEX drivers are required.

3W ACCESSORIES

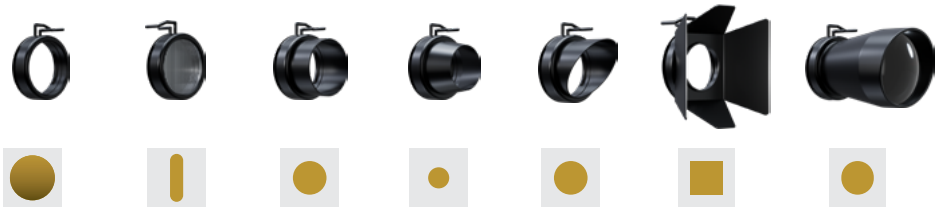

L-MTFH-01 FILTER HOLDER

L-MTAR-01 ARCHITECTURAL LENSE

L-MTSN-01 SNOOT

L-MTSC-01 CONE SNOOT

L-MTAS-01 ANGLED SNOOT

L-MTBD-01 BARNDOOR

L-MTBS-01 BOOSTER

LUXAM USA
12201 NW 35 Ste #534
Coral Springs, FL 33065
954 755 7254 | info@luxam.com

LUXAM FRANCE
80 rue du Dessous des Berges
75013 Paris
+33 982 272 946 | france@luxam.com

LUXAM GERMANY
Metzgerfeldweg 21
85737 Ismaning
+498951999651 | germany@luxam.com

LUXAM UK
184 Park Avenue
London NW10 7XL
info@luxam.com

PRODUCT CUTSHEET
L-MSPS-00 | 3W STANDALONE HEAD

TECHNICAL DATA

Voltage	not to mentionned	**Color Finishing**	Black, White and Silver
LED Wattage	3W	**Storage Temperature**	recommended 22°C
Wattage Once Used	3W	**Certificates / Standard**	UL, CE
Input Current	700-1000mA Constant Current (connect in series)	**Warranty**	5 years
Beam Angles	Zoomable 8° to 56°	**Drivers Compatible**	Constant Current
Pan / Tilt	355° / 90°	**Lifespan**	50 000 hours
Luminous Efficiency of the LED	100lm/W @RA95 min	**Lens**	Glass
Color Temperatures	3000K, 4000K, 5000K	**LED**	SMD CERAMIC
Adapter	Surface mount	**Class**	III, Indoor use only
Dimmable Options	Dimmable with PWM driver	**Rating**	IP30
CRI	95 min	**Dimensions**	56 × 32 × 62 (mm) / 2.2 × 1.3 × 2.4"
Weight	81g	**Lenght Of Tail**	145cm
Main Material	Aluminum		

PHOTOMETRICS

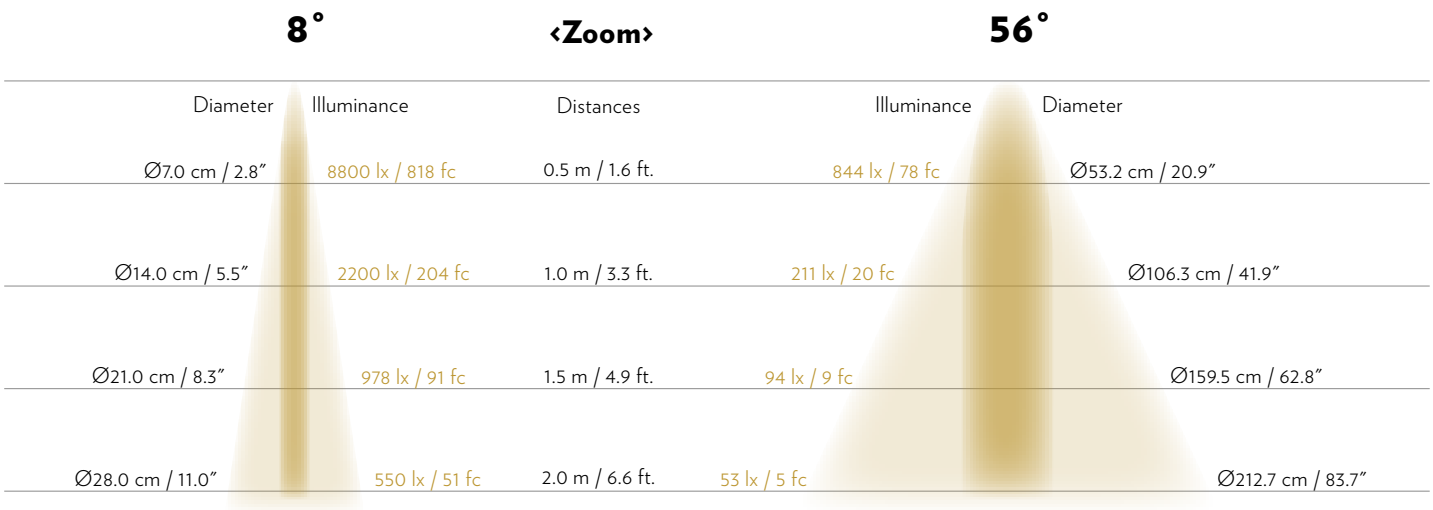

ALL VALUES IN LUX ARE GIVEN FOR A CURRENT OF 1000MA (3W)

DRIVERS

Driver	Short Description	Nbr of Fixtures	Setting
DMX-25-150-900-U1P1*	Constant Current driver with DMX control, 25W, 1 channel	4 - 6	700mA (10-54V) *
AD-36-200-1200-U1P1	Constant Current driver with DMX control, 36W, 1 channel	4 - 9	1000mA (10-54V)
SE-10-350-700-W1A*	Constant Current driver with 0-10V control, 10W, 1 channel	1 - 2	700mA (2-12V) *
SE-20-100-700-W1A*	Constant Current driver with 0-10V control, 20W, 1 channel	3 - 5	700mA (9-42V) *
SE-30-200-800-W1A*	Constant Current driver with 0-10V control, 30W, 1 channel	3 - 8	700mA (9-42V) *
SE-40-300-1050-W1A	Constant Current driver with 0-10V control, 40W, 1 channel	3 - 10	700mA (9-42V)
SOLOdrive 12W/S SL12S-M1Z1A1 (eldoled 12W	Constant Current driver with 0-10V control, 12W, 1 channel	1 - 3	950mA (2-42V)
L-CT-DMX/RDM-1-3W-6CH	Constant Current driver with manual/ DMX control, 6W x 6 channels**	1 - 2	700mA (3-21V)

These fixtures need to be wired together in series. Please refer to the dedicated manual for more details.

* 700mA the fixture operates at a reduced output of 2.1W and does not perform at its optimal level.
** To use with 3W L-MSPS-00 spotlights only

VARIATIONS



L-MTSA-02
3W Standalone
Onboard Dimmer



L-MTSP-02
L-MTSP-02 with
onboard dimmer



L-MTSP-01-ND
3W Spotlight
No dimmer

Please check product cut sheets for details - driver indications vary per product.