Technical Data

L-MSPS-20
LED WATTAGE: 6W
WATTAGE ONCE USED: 6W
INPUT CURRENT: 165mA
BEAM ANGLES: Zoomable 8° to 55°
PAN / TILT: 355° / 90°
LUMINOUS EFFICIENCY OF THE LED: 100lm/W @RA97 min
COLOR TEMPERATURES: 3000K, 4000K, 5000K
ADAPTER: Surface mount
DIMMABLE OPTIONS: Dimmable with PWM driver
CRI: 97 min
WEIGHT: 172g
MAIN MATERIAL: Aluminum
COLOR FINISHING: Black, White and Silver
STORAGE TEMPERATURE: recommended 22°C
CERTIFICATES / STANDARD: UL, CE
WARRANTY: 5 years
DRIVERS COMPATIBLE: Constant Current
LIFESPAN: 50 000 hours
LENS: Glass
LED: SMD CERAMIC
CLASS: III, Indoor use only
RATING: IP30
DIMENSIONS: 75*45*92 (mm)
LENGTH OF TAIL: 145cm

L-MSFS-20
LED WATTAGE : 6W
WATTAGE ONCE USED : 6W
INPUT CURRENT : 165mA
BEAM ANGLES : 55°
PAN / TILT : 355° / 90°
LUMINOUS EFFICIENCY OF THE LED: 100lm/W @RA97 min
COLOR TEMPERATURES : 3000K, 4000K, 5000K
ADAPTER : Surface mount
DIMMABLE OPTIONS : Dimmable with PWM driver
CRI : 97 min
WEIGHT: 271g
MAIN MATERIAL : Aluminum
COLOR FINISHING : Black, White and Silver
STORAGE TEMPERATURE: recommended 22°C
CERTIFICATES / STANDARD: UL, CE
WARRANTY : 5 years
DRIVERS COMPATIBLE: Constant Current
LIFESPAN: 50 000 hours
LENS : Glass
LED: SMD CERAMIC
CLASS: III, Indoor use only
RATING : IP30
DIMENSIONS: 93*75*108 (mm)
LENGTH OF TAIL: 145cm

L-MSZFS-20
LED WATTAGE: 6W
WATTAGE ONCE USED: 6W
INPUT CURRENT: 165mA
BEAM ANGLES: 15-36°
PAN / TILT: 355° / 90°
LUMINOUS EFFICIENCY OF THE LED: 100lm/W @RA97 min
COLOR TEMPERATURES: 3000K, 4000K, 5000K
ADAPTER: Surface mount
DIMMABLE OPTIONS: Dimmable with PWM driver
CRI: 97 min
WEIGHT: 351g
MAIN MATERIAL: Aluminum
COLOR FINISHING: Black, White and Silver
STORAGE TEMPERATURE: recommended 22°C
CERTIFICATES / STANDARD: UL, CE
WARRANTY: 5 years
DRIVERS COMPATIBLE: Constant Current
LIFESPAN: 50 000 hours
LENS: Glass
LED: SMD CERAMIC
CLASS: III, Indoor use only
RATING: IP30
DIMENSIONS: 142*75*164 (mm)
LENGTH OF TAIL: 145cm

IMPORTANT SAFETY INSTRUCTIONS

To ensure the safe installation and operation of the Luxam lighting system, follow these guidelines carefully. Failure to comply with these instructions may result in fire, electric shock, damage to the system, or voiding of the warranty.

General Safety Guidelines

1. Power Supply:
   - Disconnect the power supply before starting any installation or maintenance work. Ensure it cannot be reconnected inadvertently during the process.
   - Turn off electrical power before modifying the lighting system.
2. Installation Environment:
   - Do not install the system in wet locations.
   - Do not conceal or extend exposed conductors through a building wall.
3. Ventilation and Mounting:
   - Maintain proper ventilation around the luminaire. Do not place objects on top of it.
   - Keep a clearance of 10-15 cm between the luminaire and adjacent heat sources.
   - Use the standard mounting orientation. Non-standard orientations or high ambient temperatures may increase internal temperatures and require a reduction in output current. Refer to the specification sheet for the optimal mounting position and de-rating curve details.
4. Fire and Overheating Prevention:
   - Ensure all connections are tight to reduce the risk of fire, burns, or overheating.
   - Do not install the lighting system where exposed bare conductors can be shorted or come into contact with conductive materials.
   - Keep all luminaires at least 6 inches (152 mm) away from curtains or other combustible materials.

Fixtures-Specific Instructions

1. Manual Review: Thoroughly review the manual provided before installation. Failure to follow these instructions will void your warranty.
2. Warranty Conditions:
   - Do not attempt to repair or alter the system. This will void the warranty.
   - Always install the products in compliance with local, state, and national codes.
3. Showcase Installation: When installing in showcases, consider the internal temperature of the showcase rather than the ambient temperature. Ensure that minimum air volume, circulation, and conditioning requirements are met.

SAVE THESE INSTRUCTIONS

For more details about installation specifications, safe handling, or operation requirements, please refer to the manufacturer's documentation or contact the support team.

Basic Luminaire Manipulations

L-MSPS-20

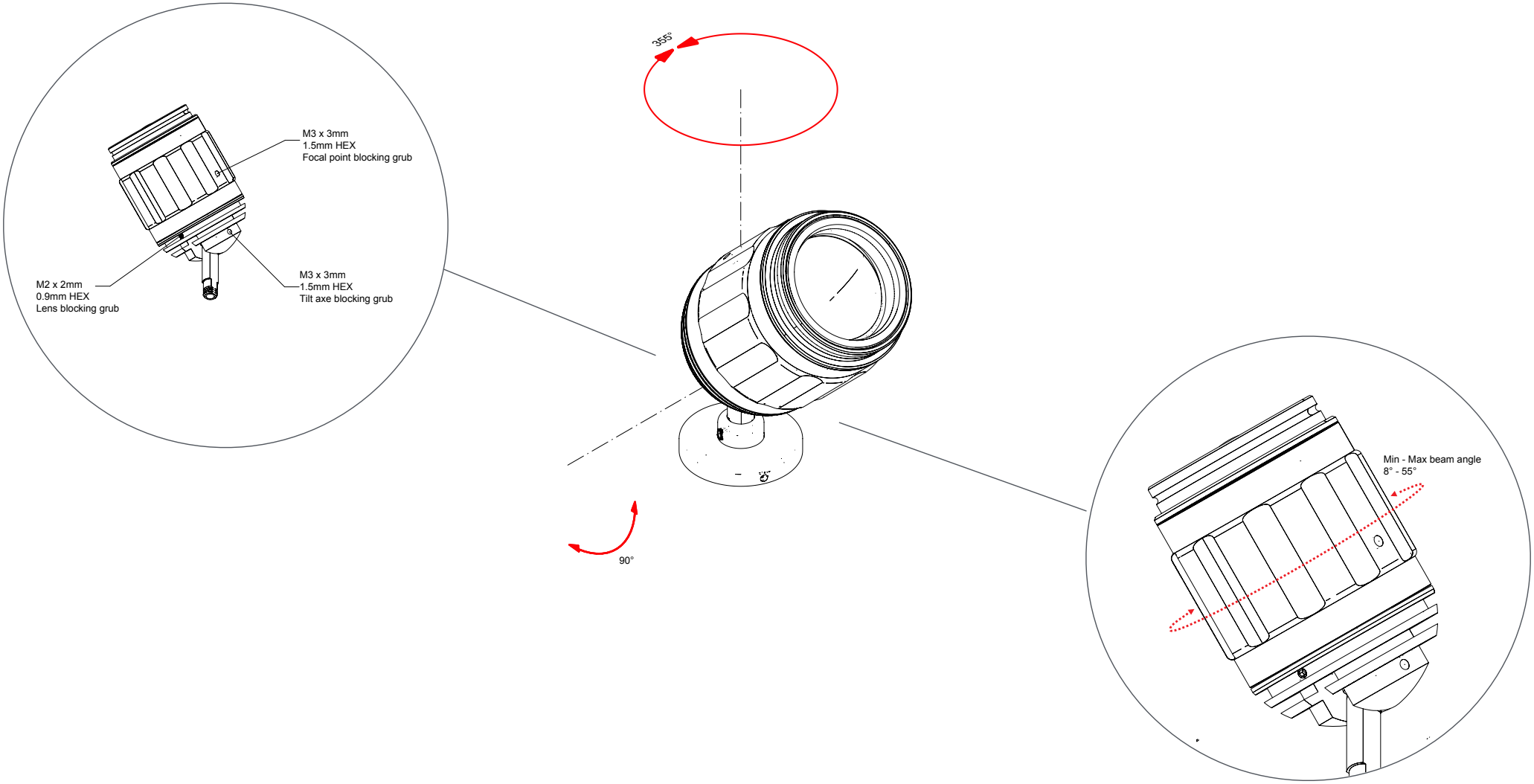

LUXAM
LIGHTING FOR MUSEUMS

LUXAM USA
12201 NW 35 Ste #534
Coral Springs, FL 33065
954 755 72 54 | info@luxam.com

LUXAM EUROPE
80 rue du Dessous des Berges
75013 Paris
+33982272946 | france@luxam.com

LUXAM GERMANY
Metzgerfeldweg 21
85737 Ismaning
+498951999651 | germany@luxam.com

LUXAM UK
184 Park Avenue
London NW10 7XL
info@luxam.com

Basic Luminaire Manipulations

L-MSFS-20

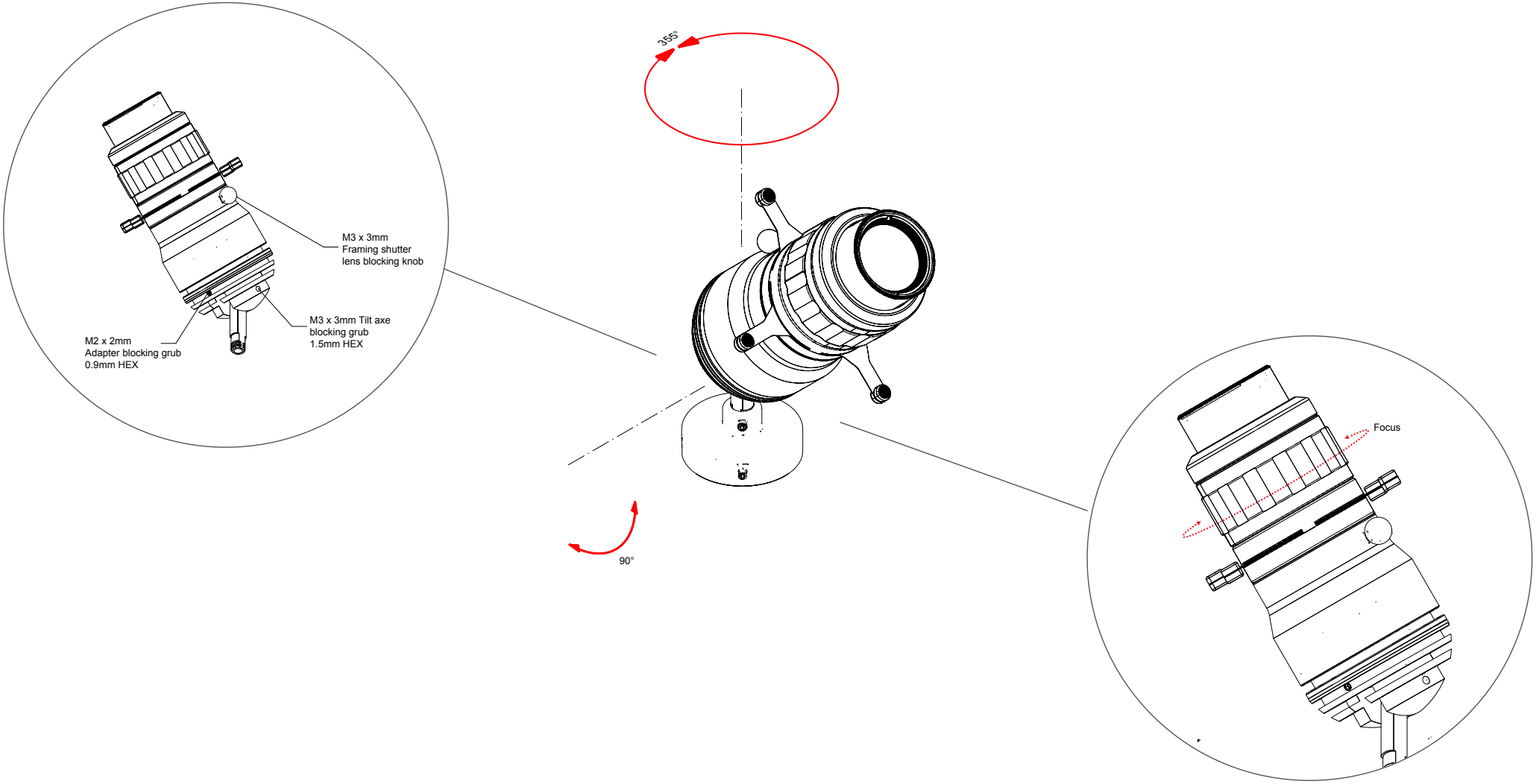

Basic Luminaire Manipulations

L-MSZFS-20

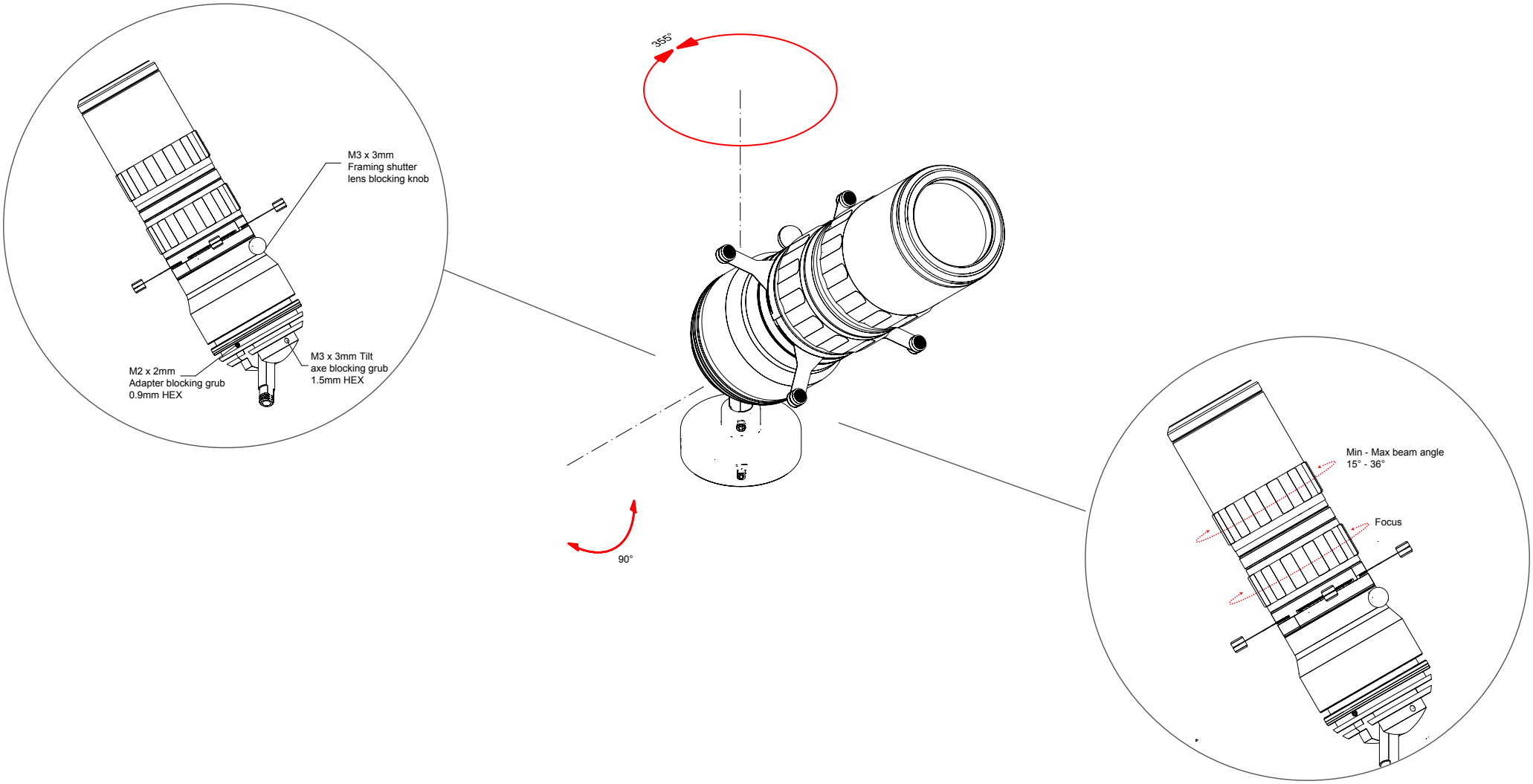

General Variations

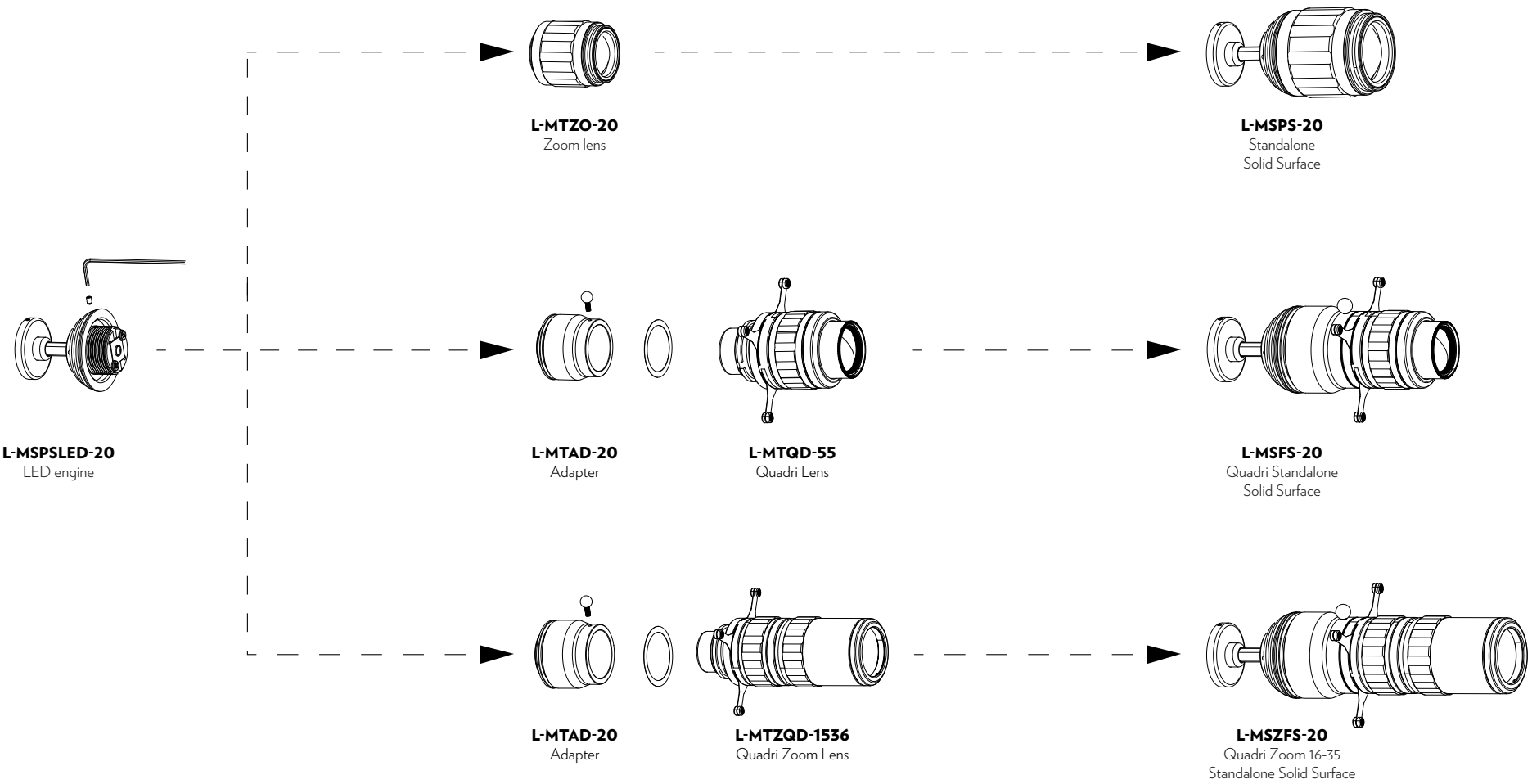

Product Dimensions

L-MSPS-20

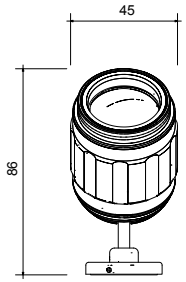

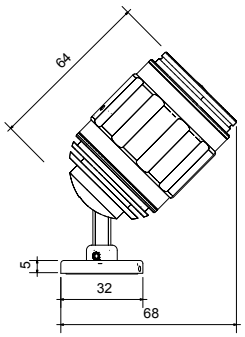

L-MSFS-20

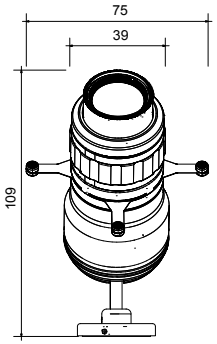

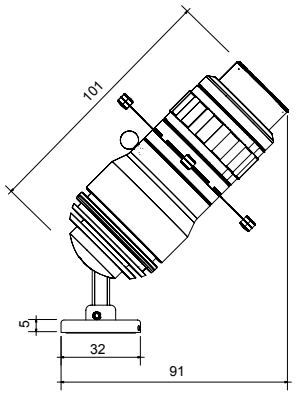

L-MSZFS-20

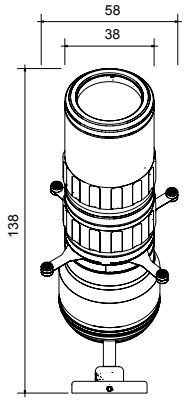

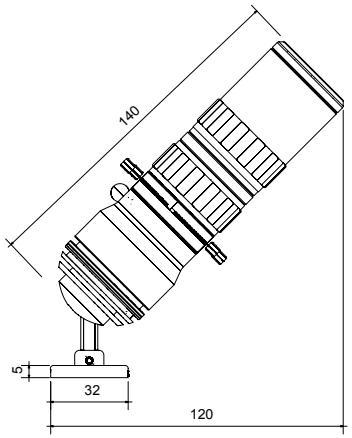

Installation

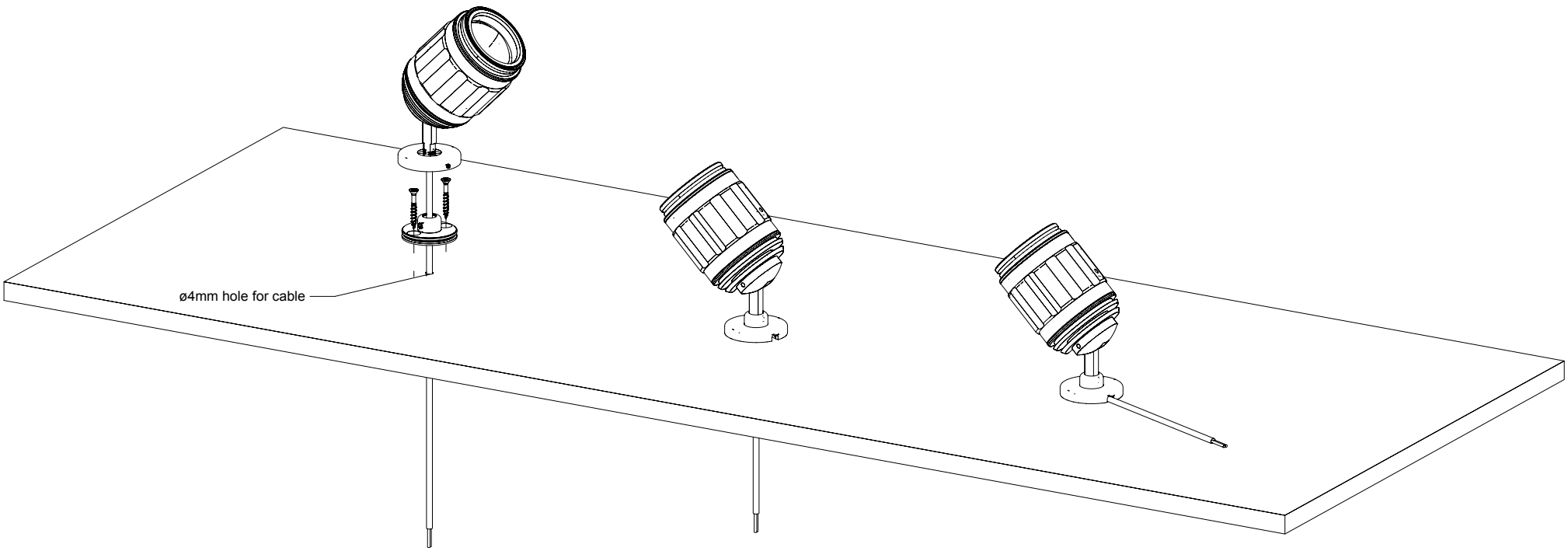

Mount Installation

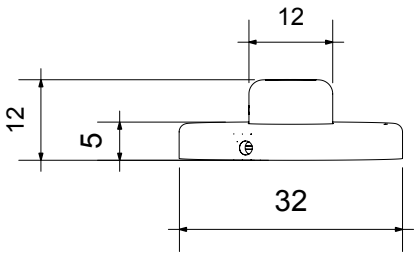

1 Full mount with cover

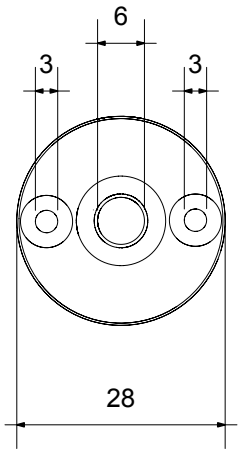

2 Mounting plate with holes

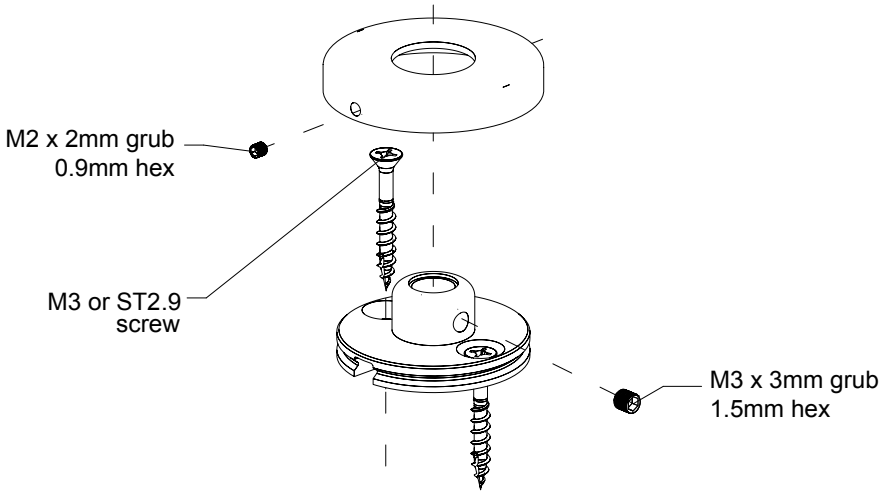

3 Assembly

L-MSPS-20-M, L-MSFS-20-M and L-MSZFS-20-M Magnet Mount Options

L-MSPS-20-M **L-MSFS-20-M** **L-MSZFS-20-M** **L-MSPS-M**

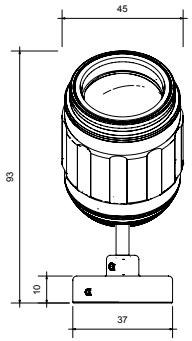

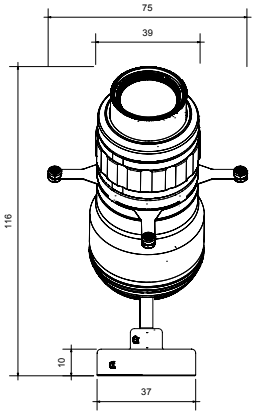

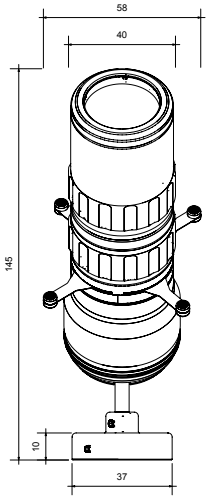

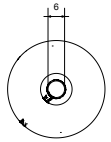

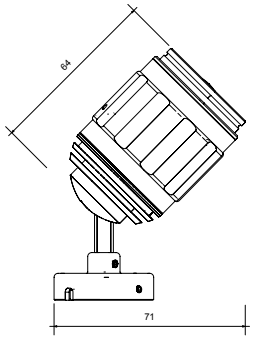

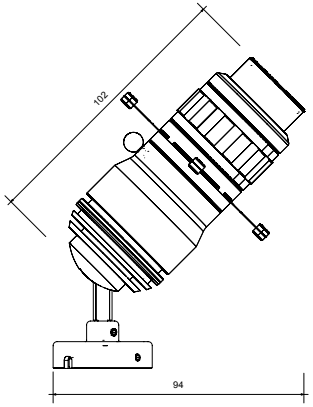

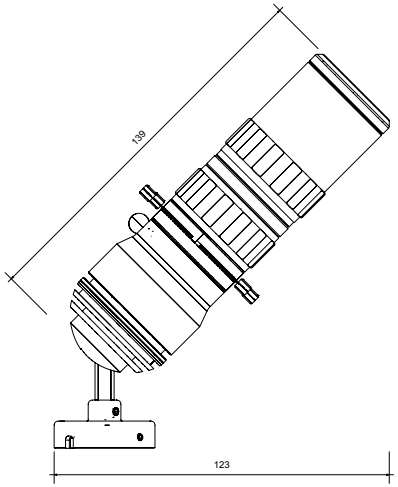

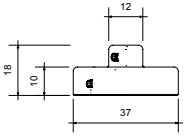

Magnet Mount Option Installation

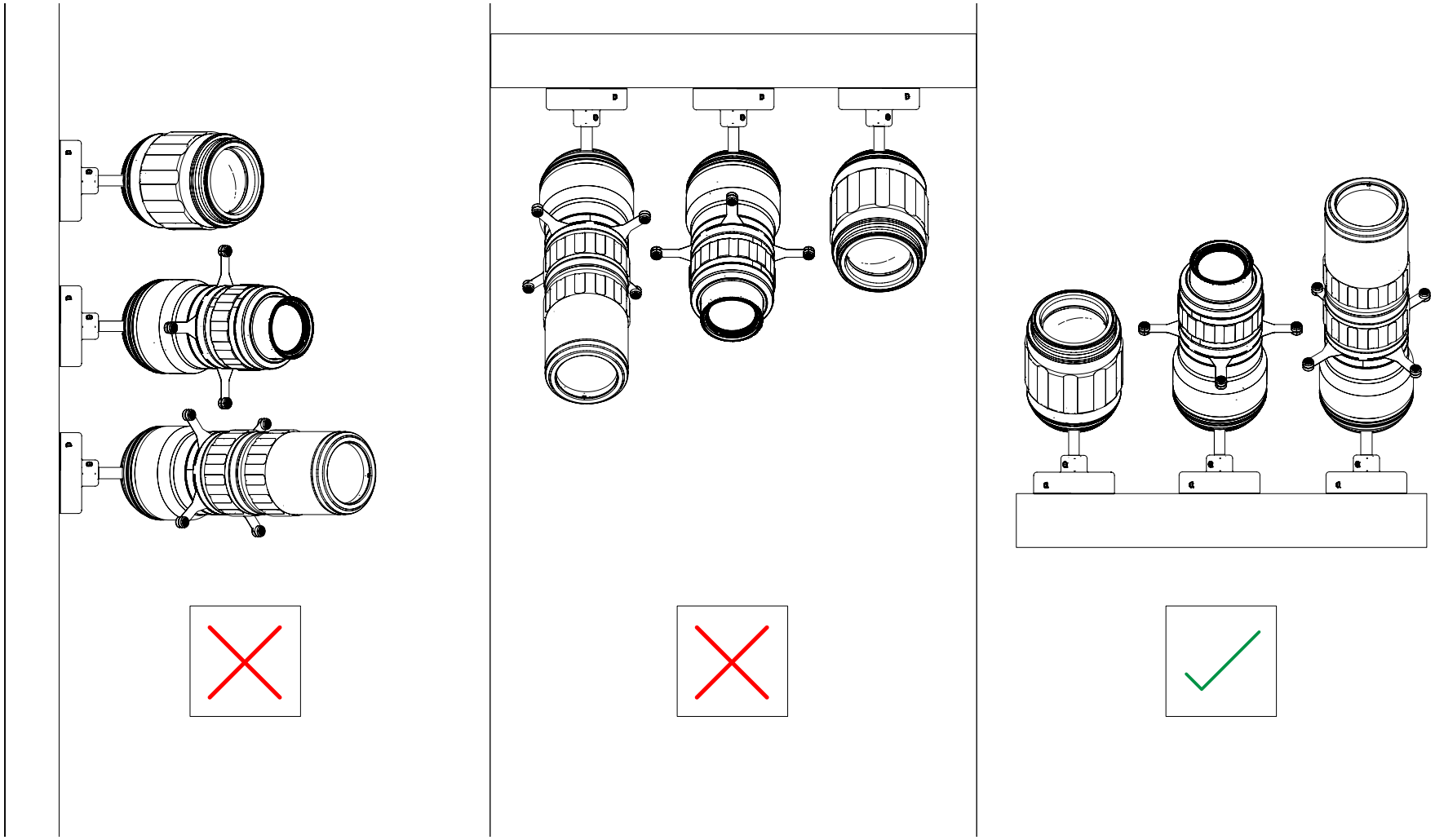

Magnet bases are designed for horizontal surfaces.
For side or suspended mounting of L-MSPS, L-MSFS, and L-MSZFS fixtures, we recommend using a screw-in base instead.

Driver Wiring Schema

L-MSPS-20 OR **L-MSFS-20** OR **L-MSZFS-20**

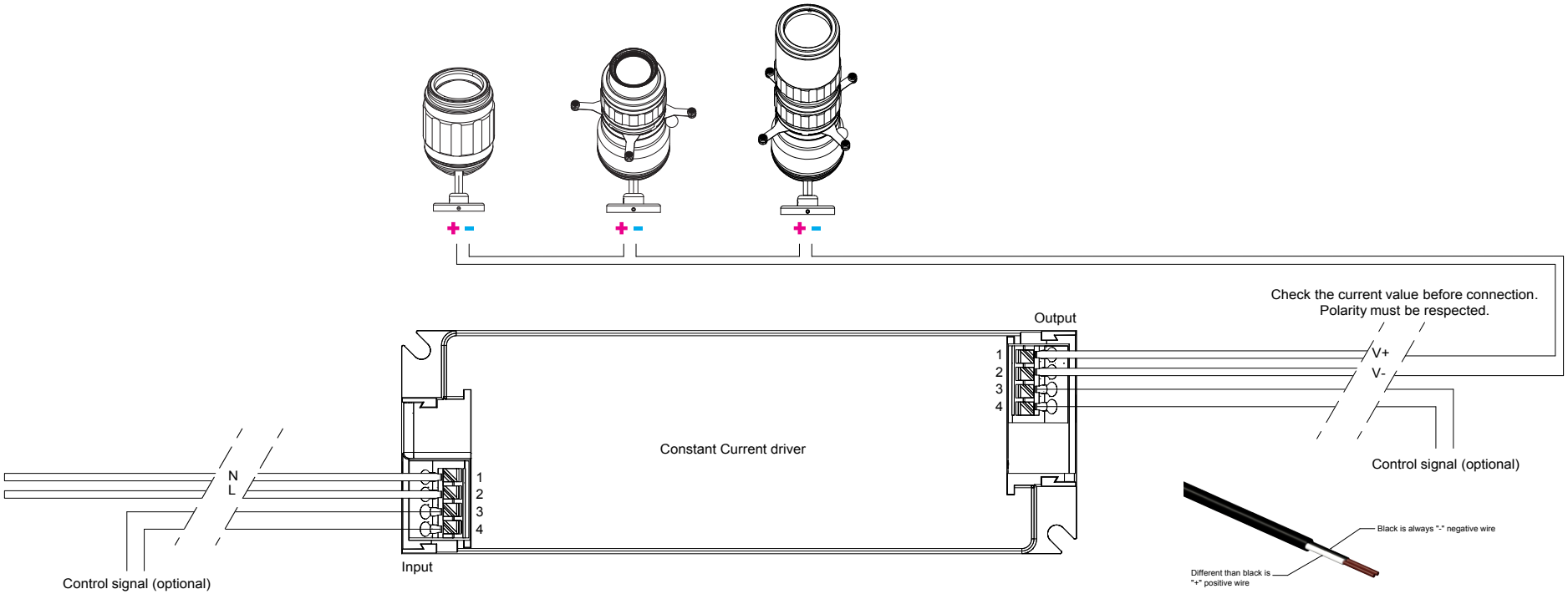

To ensure accurate calculations and detailed information, it is highly recommended to consult the dedicated drivers' cutsheets.

Driver	Short Description	Nbr of Fixtures	Setting
SE-20-100-700-W1A	Constant Current driver with 0-10V control, 20W, 1 channel	1	165mA (9-42V)
OT 12W UNV 0A3 DUALDIM DIM-1 F	Constant Current driver with 0-10V control, 12W, 1 channel	1	165mA (26-42V)
DMX-25-150-900-U1P1	Constant Current driver with manual/DMX control, 25W 1 channel	1	150mA (10-54V)
L-CT-DMX/RDM-6W-6CH	Constant Current driver with manual/DMX control, 6W x 6 channels*	1 per channel	165mA (35.4V)

*To use with 6W L-MS..-20 spotlights only

IMPORTANT: Always use with UL power unit, with isolated output.